NO. 5 JR HAND PUNCH

Instructions and Parts List

DIMENSIONS - NO. 5 JR.

Reference	IN.	MM
A	8 1/4	209.55
B	3 3/4	96.84
C	1 3/4	44.45
D	7/16	11.11
E	5/16	7.94
F	9/32	7.14
G	1 13/32	35.72

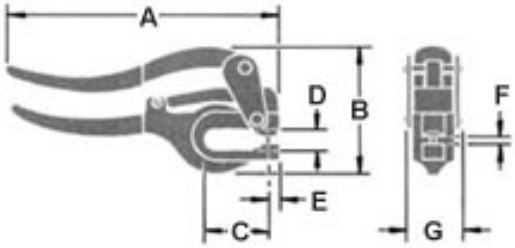

CARE: Oil at hinge points, the punch guide hole in the lower handle, and the punch point is all the care necessary.

OPERATION: To change punches, remove the lower handle screw (4) and pull upper handle assembly back to release punch from eccentric arm slot. Lift punch from guide hole. Put new punch in guide hole and move eccentric arm forward until punch lot is engaged in eccentric arm, then replace lower handle screw. Dies are threaded into lower handle. To avoid breakage, use die key to remove die or screwdriver wide enough to engage both slots. Die should be set high enough so punch can remove slug. Bench mounting base use requires a 7/16” hole in bench for 3/8” hooked clamp rod.

FOR MAXIMUM OPERATOR SAFETY DO:

1. Read and understand this manual.
2. Use only No. 5 punches and dies marked with a **W** or **R-W** designed for this tool.
3. Be sure you punch within the one ton capacity of this tool. Type and thickness of material versus final hole size will give you this tonnage.
4. Wear safety glasses.

FOR MAXIMUM OPERATOR SAFETY DO NOT:

1. Use punches and dies that are chipped or dulled.
2. Punch over capacity of the tool.
3. Nibble. Punch a full hole not a half hole as punch may contact die.

ROPER WHITNEY

2833 HUFFMAN BLVD., ROCKFORD, ILLINOIS 61103-3990 * 815/962-3011 * FAX 815/962-2227

Website: www.roperwhitney.com * Email: info@roperwhitney.com

NO. 5 JR HAND PUNCH
PARTS LIST

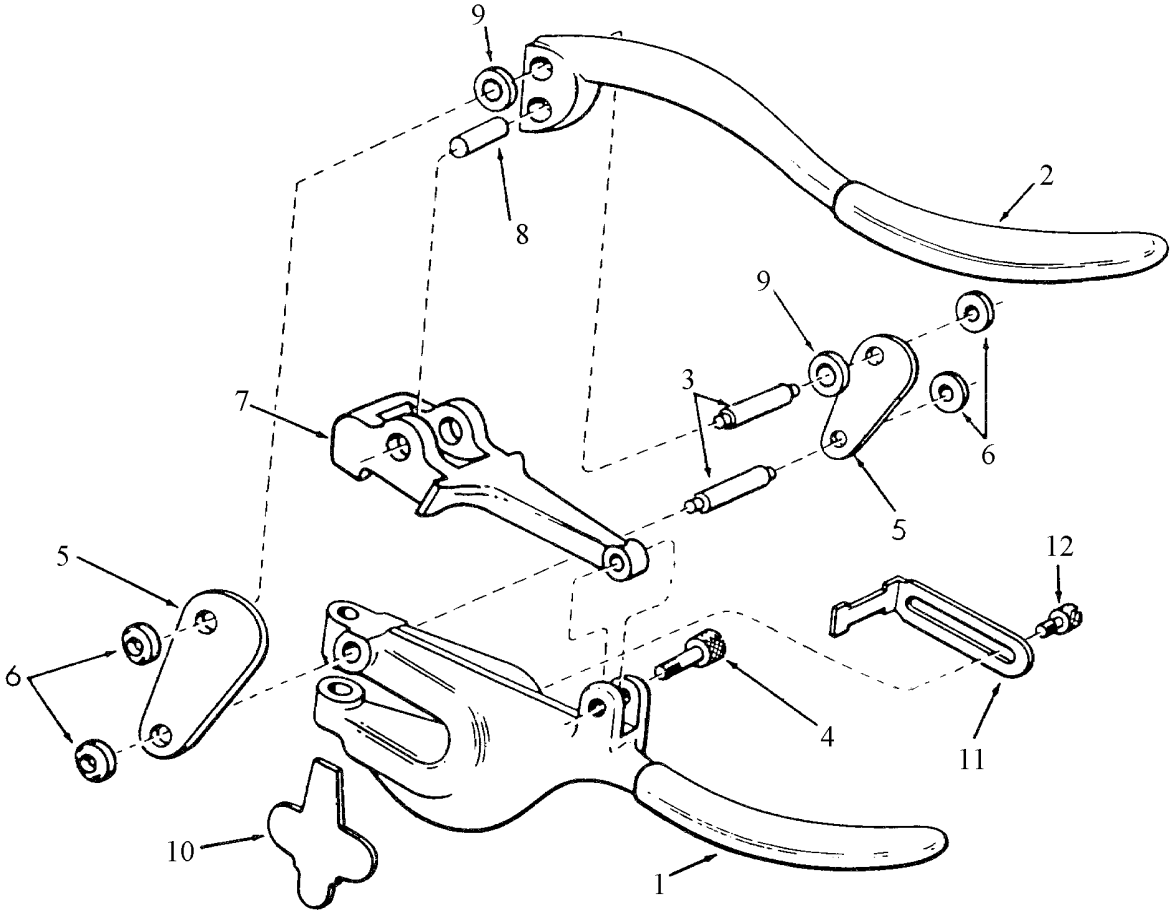

ITEM NO.	PART NO.	PART NAME	QTY.
1	730460001	Lower Handle	1
2	730460002	Upper Handle	1
4	730650004	Lower Handle Screw	1
8	630255200	Cam Pin	1
10	730480009	Key (Die Adjusting)	1
11	730420010	Gauge	1
12	730650011	Gauge Screw	1
13	600000175	Plastic Box (Not Shown)	1
*	235010050	Eccentric Arm	1
	Changeover Kit Consists of:		
3	730160003	Eccentric Pin	2
5	730240005	Eccentric Side Link	2
6	730830008	Eccentric Side Link Washer	4
7	591005100	Eccentric Arm	1
9	730830006	Spacing Washer	2

*** ECCENTRIC ARM CHANGE**
Tools built after **January 2, 1996** have a new, superior Eccentric Arm Assembly. Old style Eccentric Arm Assembly parts are no longer available. Old style No. 5 Jr. Hand Punches can be easily converted to the new style using an Eccentric Arm Changeover Kit.

NO. 5 JR. HAND PUNCH

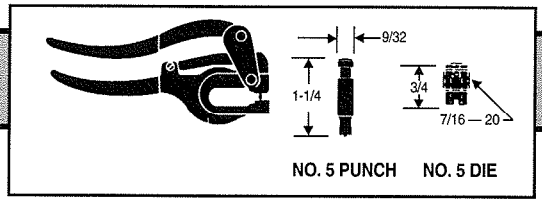

TYPE O Round Punches and Dies
Standard sizes

Fractional, Drill, or Millimeter A	Decimal Equiv. A	Punch Part Number		Die Part Number		Set Part Number		Dealer Code
1/16	.063	300050063		310050063		200050063		T-9
5/64	.078	300050078		310050078		200050078		T-9
3/32-42 DS	.094	300050094		310050094		200050094		T-9
7/64	.109	300050109		310050109		200050109		T-9
1/8	.125	300050125		310050125		200050125		T-9
30 DS	.129	300050129		310050129		200050129		T-9
9/64-28 DS	.141	300050141		310050141		200050141		T-9
5/32	.156	300050156		310050156		200050156		T-9
11/64	.172	300050172		310050172		200050172		T-9
3/16	.188	300050188		310050188		200050188		T-9
13/64	.203	300050203		310050203		200050203		T-9
7/32	.219	300050219		310050219		200050219		T-9
15/64-A DS	.234	300050234		310050234		200050234		T-9
1/4-E DS	.250	300050250		310050250		200050250		T-9
17/64-H DS	.266	300050266		310050266		200050266		T-9
9/32-K DS	.281	300050281		310050281		200050281		T-9

Part Number 235800007
Replacement Package Consists of 1 ea. 3/32, 1/8, 5/32, 3/16, 7/32, 1/4 & 9/32 p&d
Dealer Code T-6

MIN. A: .031
MAX. A: .281

	Size Range			Dealer Code
A	.063 - .109			T-5
A	.110 - .281			T-5

Under .063 add 50% to Non Stock p&d

All round punches with annealed heads. Dealer Code T-5
All round punches with four eccentric slots. Dealer Code T-5

TYPE M Obround Punches and Dies
STANDARD SIZES

Fractional Size AxB	Decimal Equiv. AxB	Punch Part Number		Die Part Number		Dealer Code
1/8 X 1/4	.125 x .250	301050816		311050816		T-7
1/8 X 9/32	.125 x .281	301050818		311050818		T-7

Size Range			Dealer Code
.095 – .281			T-5

Width sizes under .063 add 50% to the punch and die.
Width sizes .063 thru .094 add 30% to the punch & die.

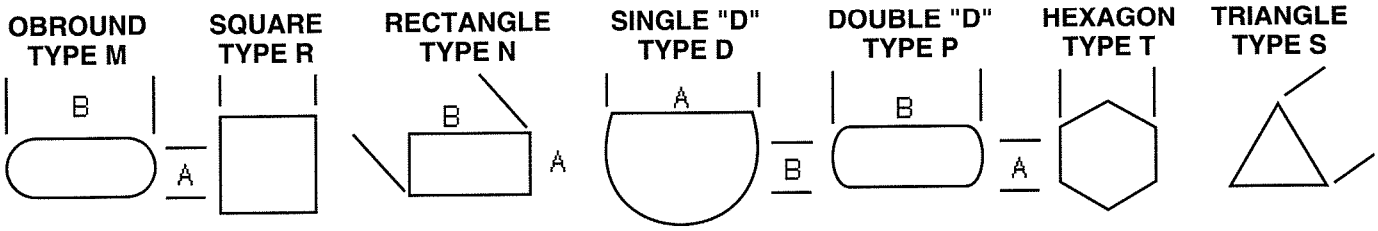

SPECIAL PURPOSE PUNCHES AND DIES

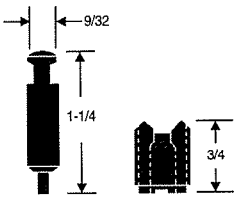

COUNTERSINKING PUNCHES AND DIES STANDARD SIZES

Fractional Size A	Decimal Equiv. A	Punch Part Number		Die Part Number		Dealer Code
3/32	.094	308050506		318050506		T-7
1/8	.125	308050508		318050508		T-7
5/32	.156	308050510		318050510		T-7

For pricing and delivery information on non stock sizes, consult our sales department.

SNAP LOCK PUNCHES AND DIES STANDARD SIZES

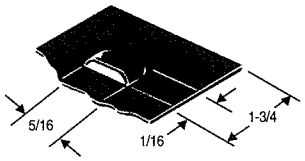

Fractional Size AxB	Decimal Equiv. AxB	Punch Part Number		Die Part Number		Dealer Code
5/16 X 1/16	.313 X .063	308052300		318052300		T-7

For pricing and delivery information on non stock sizes, consult our sales department.

BUTTON PUNCHES AND DIES STANDARD SIZES

3 THICKNESS OF 22 GA

Fractional Size	Decimal Equiv.	Punch Part Number		Die Part Number		Dealer Code
–	–	308050900		318050900		T-7

For pricing and delivery information on non stock sizes, consult our sales department.

FOR PRICING AND DELIVERY INFORMATION ON OTHER SPECIAL CONFIGURATION PUNCHES AND DIES NOT LISTED, CONSULT OUR SALES DEPARTMENT.